SSM P/N QFN04005

REVISIONS					
ZONE	REV.	DESCRIPTION	DATE	APPROVED	ECN NO.
	A	ORIGINAL RELEASE	2/26/2020	SS	

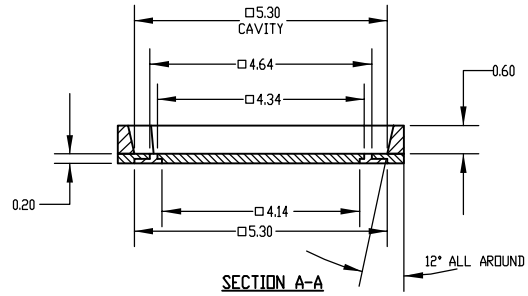

SECTION A-A

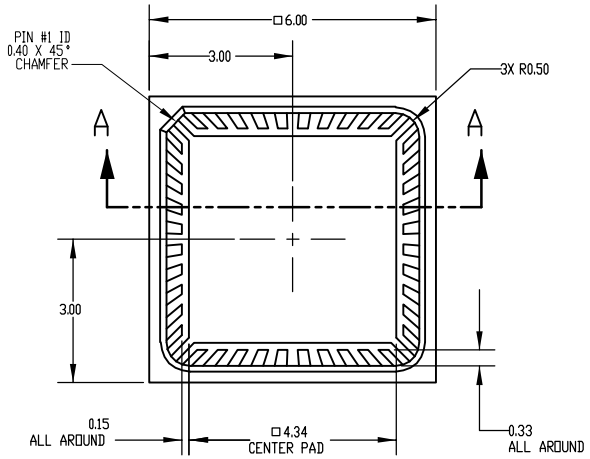

TOP VIEW

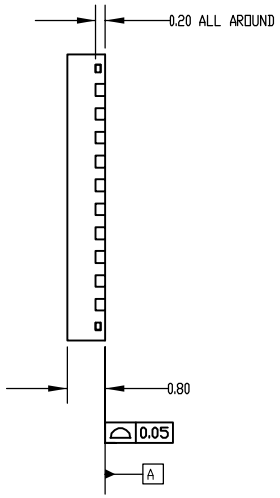

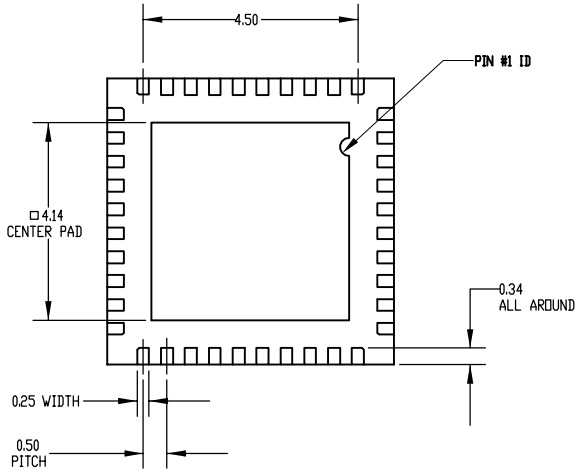

BOTTOM VIEW

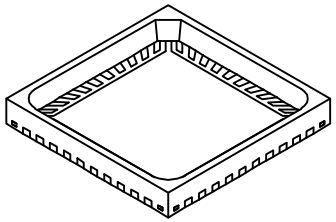

NOTES:

1. MATERIALS:
   LEAD FRAME: COPPER 194FH, THK 0.203 +0.008 -0.008
   BODY: SEMICONDUCTOR MOLDING EPOXY, CONTACT SPECTRUM FOR DETAILS.
2. LEAD FRAME FINISH: ENEPIG (Ni/Pd/Au)
   ELECTROLESS NICKEL: 1.27 - 4.51 MICRONS (50 -177 micro-inches)
   ELECTROLESS PALLADIUM: 0.15 - 0.51 MICRON (6 - 20 micro-inches)
   GOLD PLATE: 0.10 - 0.20 MICRON (4 - 8 micro-inches)
3. BODY SURFACE FINISH: VDI 21-24 (1.12-1.6 Ra)
4. PACKAGE MISMATCH: BODY OFFSET FOR LEAD FRAME = 0.076mm MAX.
5. UNLESS OTHERWISE SPECIFIED, RADIUS ON ALL MOLDED EDGES AND CORNERS = 0.25mm MAX.

NEXT ASSY	USED ON
APPLICATION	

UNLESS OTHERWISE SPECIFIED
DIMENSIONS ARE IN MILLIMETERS
TOLERANCES ARE:
ANGULAR: ±0.5 degree
.X = ±0.76 .XX=0.25

MATERIAL SEE NOTE 1
FINISH SEE NOTE 2
DO NOT SCALE DRAWING

	NAME	DATE
DRAWN	D. Abbe	2/26/20
CHECKED	S. Swen	2/26/20
ENG APPR.	S. Swen	2/26/20

COMMENTS:

Spectrum Semiconductor Materials, Inc.
www.spectrum-semi.com
155 Nicholson Lane
San Jose, CA 95134
Phone: (408) 435-5555 Fax: (408) 435-8226

TITLE: 6x6-40, DmPP WITH Ni/Pd/Au PLATING

SIZE	DWG. NO.	REV
B	501285	A

SCALE: 10:1 WEIGHT: SHEET 1 OF 1

SPECTRUM SEMICONDUCTOR MATERIALS, INC.
www.spectrum-semi.com Ph: 408.435.5555 Email: ssm_sales@spectrum-semi.com