SSM P/N HDR25802

REVISIONS					
REV	ZONE	ECO #	DESCRIPTION	CHANGED BY	DATE
A			INITIAL DESIGN		12/11/18

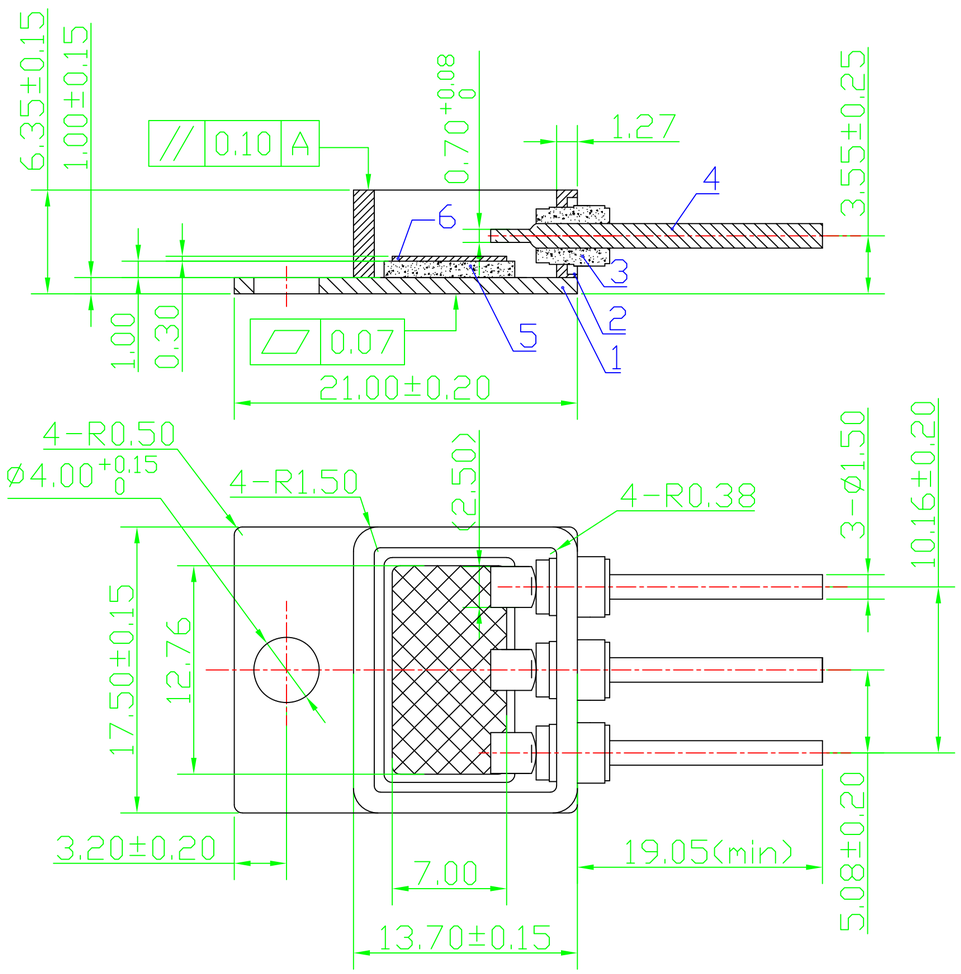

GENERAL SPECIFICATIONS COMPLY WITH
MIL-STD-750E AND SCREENED PER MIL-PRF-38354

1. MATERIAL: SEE BOM

2. FINAL FINISH:
   1.27 µM MIN GOLD PLATED OVER NICKEL.
   GOLD PLATING TO BE MEASURED AT THE MIDPOINT OF THE EXTERNAL LEADS.

3. PART MUST EQUAL OR EXCEED 10^9 OHMS ISOLATION TEST WITH 500 V.D.C PINS TO CASE

4. BREAKDOWN VOLTAGE: PART MUST PASS 1400V BREAKDOWN VOLTAGE TEST WITH NORMAL TESTING CONDITIONS (PINS AND CASE)

5. PART MUST PASS FINE LEAK TEST 1X10-8 ATM (HE)/CC/SEC.MAX.

BILL OF MATERIAL		
ITEM	COMPONENT NAME	RAW MATERIAL
1	BASE	W85CU15
2	FRAME	FENI ALLOY
3	CERAMIC FEEDTHRU	AL203 95%
4	THROUGH PINS	COPPER CORED KOVAR
5	SUBSTRATE	BeO
6	TAB	CPC(Cu-MoCu-Cu) ALLOY
TOL. U.O.S	ALL DIMENSIONS ARE IN MM, STANDARD ISO 2768-1 [M] AND CHINA GB/T1804-M	

TITLE	CERAMIC TO258 PACKAGE, 1400V, WITH BEO SUBSTRATE			DRAWN BY	CHECKED BY	APPROVED BY	SCALE	SHEET
P/N	150-02083-00	REVISION	A	JOHN ZHAO		BEN TONG	1 : 1	1 OF 1

SPECTRUM SEMICONDUCTOR MATERIALS, INC.
www.spectrum-semi.com Ph: 408.435.5555 Email: ssm_sales@spectrum-semi.com