SSM P/N CCJ04403

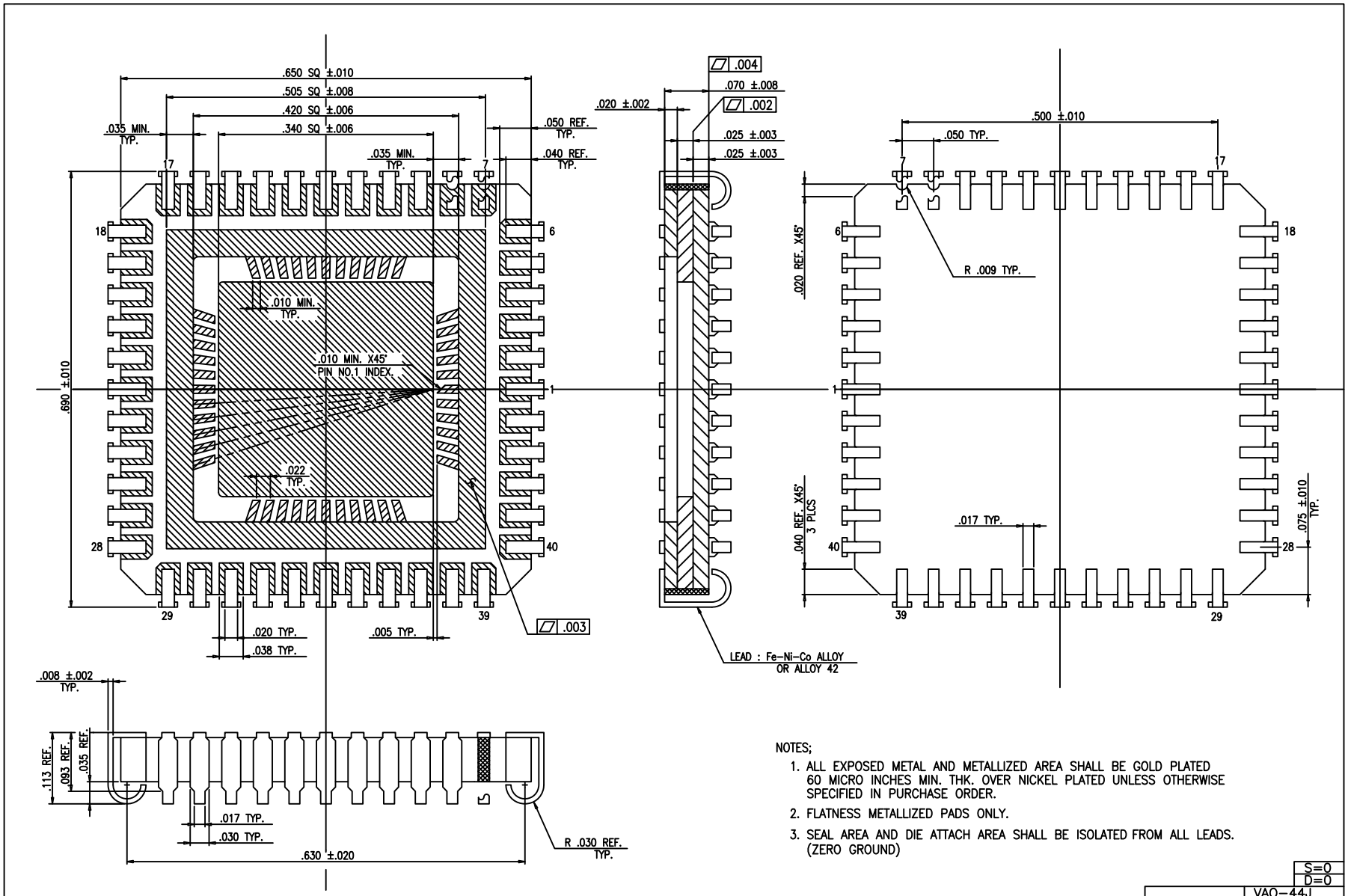

NOTES;

1. ALL EXPOSED METAL AND METALLIZED AREA SHALL BE GOLD PLATED 60 MICRO INCHES MIN. THK. OVER NICKEL PLATED UNLESS OTHERWISE SPECIFIED IN PURCHASE ORDER.
2. FLATNESS METALLIZED PADS ONLY.
3. SEAL AREA AND DIE ATTACH AREA SHALL BE ISOLATED FROM ALL LEADS. (ZERO GROUND)

MODIFICATIONS					
	CHANGE	DATE	DRAWN	CHECKED	APPROVED

NAME 44 CQFJ (.340 SQ. CAV.)	TOLERANCES: UNLESS OTHERWISE SPECIFIED ± .005 THIRD ANGLE PROJECTION		
SCALE 10/1	MATERIAL KYOCERA A-440		
KYOCERA	KYOCERA CORPORATION KYOTO JAPAN		

S=0
D=0

VAQ-44J

DRAWN	CHECKED	APPROVED	DATE
S.M	UE / K.H	M.S	DEC.22.'98

DRAWING NO. PB-F86315 SHEET 1/2

PB-12832-B MOD.

SPECTRUM SEMICONDUCTOR MATERIALS, INC. www.spectrum-semi.com Phone: 408.435.5555 Fax: 408.435.8226

SSM P/N CCJ04403

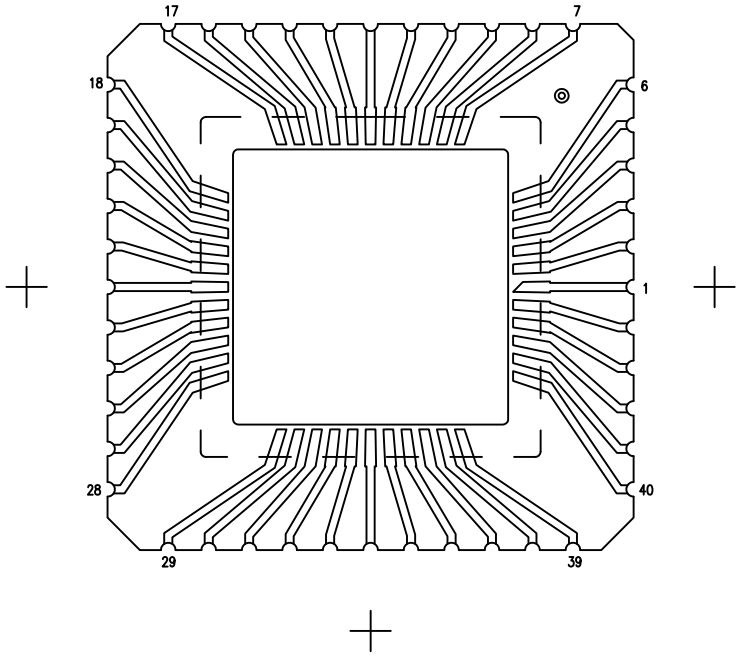

B/F PATTERN

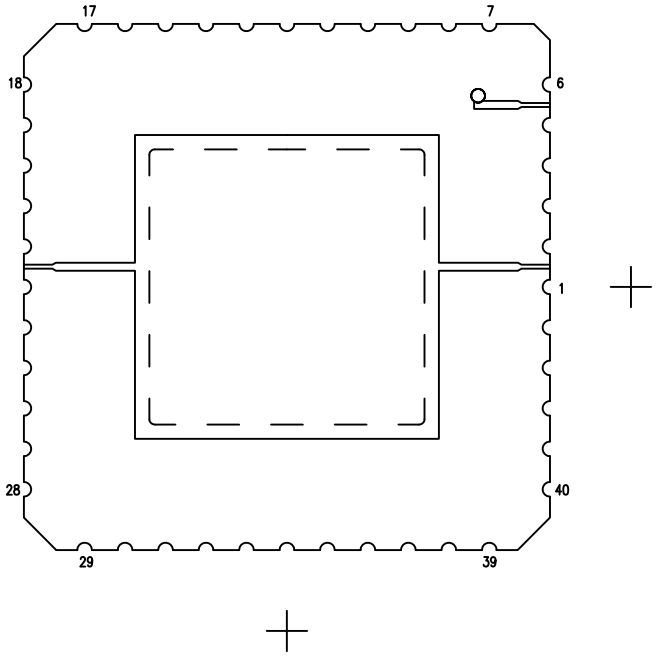

D/A PATTERN

MODIFICATIONS										
					NAME 44 CQFJ (.340 SQ. CAV.)	TOLERANCES: UNLESS OTHERWISE SPECIFIED	DRAWN	CHECKED	APPROVED	DATE
					SCALE 10/1	MATERIAL	S.M	UE. K.H	M.S	DEC.22.'98
					KYOCERA	KYOCERA CORPORATION KYOTO JAPAN	DRAWING NO. PB-F86315			SHEET 2/2
	CHANGE	DATE	DRAWN	CHECKED	APPROVED					

SPECTRUM SEMICONDUCTOR MATERIALS, INC. www.spectrum-semi.com Phone: 408.435.5555 Fax: 408.435.8226

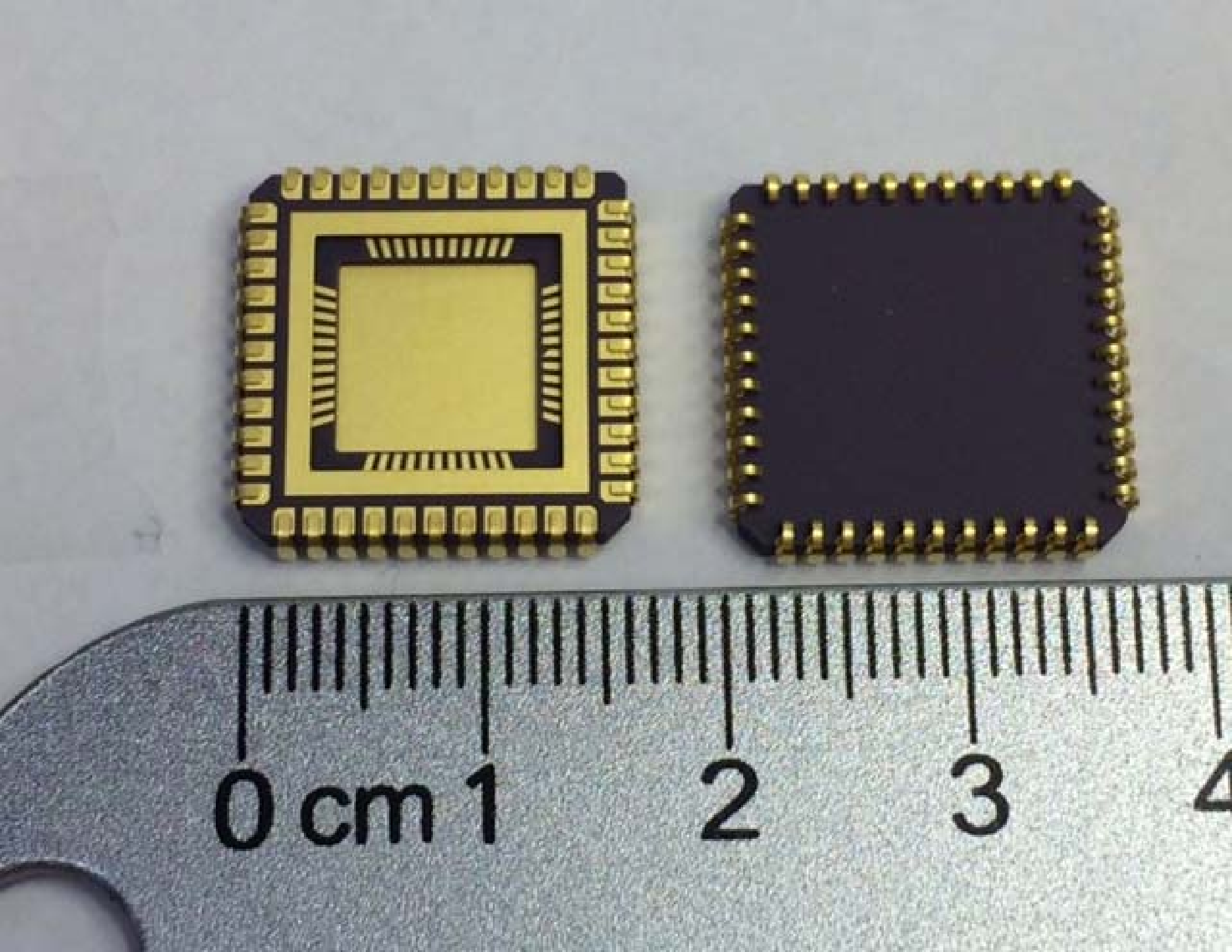
0 cm 1
2
3
4